GOLOVANOV, [illegible], [illegible], [illegible]

Determining the parameters of the [illegible] material resolvers by means of the simple [illegible] method. Elektr. prom. no.2:127-130 [illegible] '64. (MIRA [illegible])

LYAKHOV, O., kand.tekhn.nauk; [illegible], O., insh.

Highly economical water heater. Obshchestv.pit. no.1:38-40 Ja '63. (MIRA 16:4)

(Water heaters) (Gas, Natural)

SOKOLOWSKI, [illegible] inz.

Krakow [illegible]
C[illegible]ling equip[illegible] [illegible] Przegl Mech 22 no.9,10:307-308,
10-25 My [illegible]62.

1. Centralny Ośrodek Konstrukcyjno-Badawczy Obrabiarek,
Krakow.

The nutritive value of dried milk. The hygienic properties of dried milk. B. S. Gologorskii and M. P. Gosukova. *Voprosy Pitaniya* 6, No. 5: 87-94 in English (1937).—Milk powder is very low in saprophytic microbes. When prepd. by spraying, the powder is 96.94-98.21% sol., while the film method of prepn. gives a product which is only 72.9% sol. If stored in the presence of moisture it becomes less sol. S. A. K.

The nutritive value of dried milk. The assimilation of dried milk. B. S. Gologorskii and M. P. Podosinnikova. *Voprosy Pitaniya* 6, No. 5, 95-104 (in English 104-105) (1937).—The assimilation of milk powder is slightly inferior to that of whole milk, differences of 1.7% for protein and 0.5% for fat being obtained. The milk sugar is assimilated to an equal extent in each case. The different methods of prepn. of the powder have little effect on capacity for assimilation. S. A. Kazala

1ST AND 2ND ORDERS

PROCESSES AND PROPERTIES INDEX

3RD AND 4TH ORDERS

CA

17

Vitamin C content in the flora of Stavropol' and environs. B. S. Golsguskii and S. A. Agamyan (Inst. Epidemiol. Microbiol., Stavropol, Russia). *Gigiena i Sanit.* **1944**, No. 11, 30–4(in Russian).—From analyses particularly of the leaves of 29 varieties of trees, 30 shrubs, and 111 herbaceous plants, high ascorbic acid contents were found in the spring, particularly in the first two groups. Walnut leaves contain up to 1132 mg./100 g., *Primula* 969, horse-radish 603. Nonedible leaves are suitable as raw material for industrial production of vitamin C. No vitamin C-rich varieties were found in any species of the *Compositae* family. The majority of the plants investigated reach a const. vitamin C content at an early stage in the year while others (linden, willow, grape-vine) are tardy; in few cases (white acacia, gleditschia) does the content drop with the progress of the season. There is a direct relation between the vitamin C and the chlorophyll content: the outer green and the inner bleached leaves of cabbage contain 85.8 and 47 mg./100 g., resp.; the chlorophyll-free *Lathraea squamosa* contains no vitamin C. In medicinal plants the following contents were found: herba *Adonis vernalis* 225; folia trifolii 204.7; *Capsella bursa-pastoris* 226.8.

N. Thon

OPEN MATERIALS INDEX

COMMON ELEMENTS

ASM-SLA METALLURGICAL LITERATURE CLASSIFICATION

12

Speeding up of ashing of food products in heavy metal determination. B. S. Gologorskii. *Gigiena i Sanit.* 11, No. 10, 43-44 (1946). Aqua regia was found to be the quickest and most reliable method in wet ashing of flour, fish, and meat products.

Boris Gutoff

22

Waste water of a cracking plant B. N. Gedeguvskii and V. P. Yudina. Gigiena i Sanit. 12, No. 3, 9-12(1947). Exam. of waste water at Chernikovsk cracking plant showed that it contains considerable amts. of petroleum as an insol. layer, up to 280 mg./l. dissolved hydrocarbons, and up to 306 p.p.m. H_2S. G. M. K.

ASM-SLA METALLURGICAL LITERATURE CLASSIFICATION

Vitamin C in market milk. B. S. Gologorskii. [illegible] *Sanit.* 12, No. 8, 49-53 [illegible]—The av. vitamin C level in market milk in Dnepropetrovsk is [illegible] mg./l. The summer milk contains [illegible] more vitamin C than the winter milk. Large variations exist among [illegible] (up to a factor of [illegible]). Since the milk is kept at 0-[illegible], no appreciable destruction of C takes place in 1 days; this makes possible vit. concentration of the winter milk supply by vitamin cats. or tablets. Little difference in stability was observed between raw and pasteurized milk.

G. M. Kosolapov

C4

11 D

The dynamics of ascorbic acid content in artificially ripened and over ripened tomatoes

Vitamin A and carotene in milk. [illegible] Gulagowskii [illegible] Sovet. Ed. No. 4, 21-6 (1948). Deterns. of vitamin A, I and carotene were made in 58 tests with milk samples obtained in the open market in February-March, May, and September-November. Further, 75 tests were made with the samples of dried milk obtained from 2 factories. Fresh cow milk contained, on the av., 1.1-57 and 234 γ per 100 ml. of carotene and I, resp. Milk samples obtained in summer and autumn had 3-4 times more carotene and I than had winter milk. No destruction of carotene or I resulted from boiling for 5 min. The av. content of carotene and I in dried milk was 0.133 and 2.34 mg. per 100 g., resp. Storage for 12-16 months in air-tight containers did not reduce the I content of dried milk. Reconstituted dried milk had a somewhat higher carotene and I content than had fresh cow milk.
M. A.

Preservation of milk by high frequency current. B. Gologorskii and Yu. V. Tankovskii (Sovetskaya Nauka, 13, No. 9, 32-3; 1948).—Irradiation of milk by an S-[illegible] high-frequency generator (the frequency range not stated) showed that 0.5 hr treatment with temp. rise to 70-5° is more effective than 1-2 min. exposure with temp. rise to 96-8°, in respect to disappearance of microflora. The loss of albumin is low (6.6%), but ascorbic acid is better preserved (5% loss) in the short treatment; in the long treatment the loss is 11.8%. G. M. Kosolapoff

ASM-SLA METALLURGICAL LITERATURE CLASSIFICATION

Vitamin C content in plants of Bashkir S S R near Ufa. B. S. Cologorskii, E. N. Klotsikova, Aleova, et al. M. A. Gol'dshtein (Inst. Epidemiol. Microbiol., Ufa). Gigiena i san. 1949, No. [illegible] Data of vitamin C in native plants showed *Rosa cinnamomea* with the highest levels: fruit 2156 mg. %, plant leaves 196 mg. %; other high level plants are: *Juglans mandshurica* (1183), gladiolus, Red Canna (625), *Acer platanoides* (884), and *Pulsatilla concinna* (740). Preliminary data on vitamin C levels in plants of varying degrees of growth are presented. G. M. Kosolapov

GOLOGORSKIY, Samuil Davidovich; YELENSKIY, Mikhail Kharitonovich; NAZARENKO, N., red.; GONCHAR, A., red.; ZELENKOVA, Ye., tekhn.red.

[Handbook for making estimates for capital construction] Spravochnoe posobie po sostavleniiu smet na kapital'noe stroitel'stvo. Kiev, Gos.izd-vo lit-ry po stroit. i arkhit. USSR, 1960. 550 p. (MIRA 14:2)
(Building--Estimates)

GOLOGORSKIY, V.A.

The problem of solitary liver cysts. Sov.med. 22 no.7:134-135 Jl '58 (MIRA 11:10)

1. Iz kafedry obshchey khirurgii (zav. - prof. G.P. Zaytsev) pediatricheskogo fakul'teta II Moskovskogo meditsinskogo instituta

(LIVER, cysts
solitary (Rus))

GOLOGORSKIY, V. A. Cand Med Sci -- (diss) "Data for the application of potentiated anesthesia in surgical clinic." Mos, 1959. 20 pp (Second Mos State Med Inst im N. I. Pirogov), 250 copies (KL, 38-59, 112)

GOLOGORSKIY, V.A. (Moskva, G-242, Sadovo-Kudrinskaya, d. 7, kv. 57)

Errors and hazards in modern anesthesia. Nov. khir. arkh. no.2: 48-59 Mr-Ap '59. (MIRA 12:7)

1. Kafedra obshchey khirurgii (zav. - prof. G. P. Zaytsev) pediatricheskogo fakul'teta 2-go Moskovskogo meditsinskogo instituta.
(ANESTHESIA--COMPLICATIONS AND SEQUELAE)

GOLOGORSKIY, V.A.

Results of potentiated anesthesia in surgery. Khirurgiia 35 no.2:83-91 F '59. (MIRA 12:5)

1. Iz kafedry obshchey khirurgii (zav. - prof. G.P.Zaytsev) pediatricheskogo fakul'teta II Moskovskogo gosudarstvennogo meditsinskogo instituta im. N.I.Pirogova.
(HIBERNATION, ARTIFICIAL,
results (Rus))

GOLOGORSKIY, V.A.

Clinical aspects of potentiated anesthesia. Kaz.med.zhur. 40 no.6:61-69 N-D '59. (MIRA 13:5)

1. Iz kafedry obshchey khirurgii (zav. - prof. G.P. Zaytsev) pediatricheskogo fakul'teta 2-go Moskovskogo meditsinskogo instituta im. N.I. Pirogova.
(ANESTHESIA)

GOLOGORSKIY, V.A., kand.med.nauk; TSIRUL'NIK, S.I.

Surface endotracheal anesthesia in serious gynecological operations. Nauch.trudy Chetv.Mosk.gor.klin.bol'. no.1:174-182 '61. (MIRA 16:2)

1. Iz kafedry obshchey khirurgii pediatricheskogo fakul'teta (zav. - prof. G.P. Zaytsev) i ginekologicheskoy kliniki (zav. - prof. V.N. Vlasov), kafedry akusherstva i ginekologii pediatricheskogo fakul'teta (zav. prof. A.A. Lebedev) 2-go Moskovskogo gosudarstvennogo meditsinskogo instituta imeni N.I. Pirogova na baze Moskovskoy gorodskoy klinicheskoy bol'nitsy No.4 (glavnyy vrach G.F. Papko).

(INTRATRACHEAL ANESTHESIA) (GYNECOLOGY, OPERATIVE)

GOLOGORSKIY, V.A.; KAZANTSEV, F.N.

Problem of causes and treatment of hypotension during anesthesia and surgery. Khirurgiia 37 no.4:52-62 '61. (MIRA 14:4)

1. Iz kafedry obshchey khirurgii (zav. - prof. G.P. Zaytsev) pediatricheskogo fakul'teta II Moskovskogo gosudarstvennogo meditsinskogo instituta imeni N.I. Pirogova.
(ANESTHESIA) (SURGERY, OPERATIVE) (HYPOTENSION)

ZAITSEV, G.P.; G LOMOLSKIY, V.A.; [illegible], G.N., red.; [illegible] MAIA. K.A., tekhn. red.

[Potentiated anesthesia in the surgical clinic] Potentsirovannyi narkoz v khirurgicheskoi klinike. Moskva, Medgiz, 19[illegible]. 24[illegible] p. (MIRA 16:12)

TSIRUL'NIK, S.I.; GOLOGORSKIY, V.A.

Analgesic anesthesia with nitrous oxide in surgical gynecology. Akush. i gin. no.2:31-37'63. (MIRA 16:10)

1. Iz kafedry akusherstva i ginekologii (zav. - prof. A.A. Lebedev) i kafedry obshchey khirurgii (zav. - prof. G.P. Zaytsev) pediatricheskogo fakul'teta II Moskovskogo meditsinskogo instituta imeni N.I.Pirogova.
(GYNECOLOGY, OPERATIVE) (NITROUS OXYDE)
(ANESTHESIA)

YUKHTIN, V.I., [illegible]
GOLDSHEIN, V.A., [illegible]

Anesthesia in surgery on the [illegible] of the lower intestine. Vest. Khir. 90 no.5:93-1[illegible] My'63 (MIRA 17:6)

1. Iz kafedry [illegible] - prof. [illegible]) pediatricheskogo fakul'teta - [illegible] stituta imeni N.I. Pirogova.

GOLOGORSKIY, V.A.; [illegible], S...

Advantages of combined anesthesia with the use of muscle relaxants in gynecologic surgery. Sov. med. 27 no. [illegible] 3 [illegible] '64.

(MIRA 17:[illegible])

1. Kafedra obshchey khirurgii (zav. - prof. G. [illegible] Zaytsev) i kafedra akusherstva i ginekologii (zav. - prof. A.A. Lebedev) pediatricheskogo fakul'teta II Moskovskogo meditsinskogo instituta imeni Pirogova.

[illegible], Vasiliy Markovich; [illegible], Aleksandr [illegible],
[illegible], V.A., red.

[Anesthesia and anesthetic apparatus] Nakhoz i narkozny
apparaty. Moskva, Meditsina, 19[illegible]. 22[illegible] p.
(MIRA [illegible])

[illegible] anesthesia. Vest. khir. 84 no.1: [illegible] (MIRA 18:7)

[illegible] (zav. - prof. G.I.Zaytsev) pediatri- [illegible] go meditsinskogo [illegible]

DOLGOPLOSK, B.A.; KROLACHEVA, Ye. N.; KHRENNIKOVA, Ye.K.; KUZNETSOVA, Ye.I.; GOLOGOVA, K.G.

Polymerization of dienes under the influence of homogeneous catalytic systems containing cobalt and nickel salts. Dokl. AN SSSR 135 no.4:847-848 '60. (MIRA 13:11)

1. Vsesoyuznyy nauchno-issledovatel'skiy institut sinteticheskogo kauchuka im. S. V. Lebedeva. 2. Chlen-korrespondent AN SSSR (for Dolgoplosk).

(Olefins) (Polymerization)

GOLDFOVSKIY, E. [illegible]

AUTHORS: [illegible]

TITLE: [illegible]

PERIODICAL: [illegible]

ABSTRACT: [illegible]

CARD 1/[illegible]

Semi-Automatic Welding of Thin Steel Structures [illegible]

ASSOCIATION: Institut elektrosvarki imeni Ye.O. Patona AN USSR (Institute of Electric-Welding imeni Ye.O. Paton, AS Ukrainian SSR)

SUBMITTED: [illegible]

1. Steel--Arc welding 2. Arc welding--Equipment 3. Carbon dioxide--Performance 4. Structures--Materials

Card 1/2

125-58-5-12/13

AUTHORS: Potap'yevskiy, A.G., Sologovskiy, S.M., and Manoylo, S.A.

TITLE: Semi-Automatic Device for Welding Thin-Sheet Steel Under Assembly Conditions (Polumavtomat dlya svarki tonkolistovoy stali v montazhnykh usloviyakh)

PERIODICAL: Avtomaticheskaya Svarka, 1958, Nr 5, pp 89-91 (USSR)

ABSTRACT: A semi-automatic device for arc welding in carbon dioxide has been especially devised for assembling sheet metal structures. It permits welding in any position. The feed mechanism which weighs only 3 kg, is placed in a small knapsack carried by the operator on the back. It does not hamper the operator. The design and operation information is illustrated by a drawing and an electric diagram. The device is designed by the Electric Welding Institute imeni Paton and built at the Kiyev Mechanical Plant. There are 2 figures and 5 Soviet references.

Card 1/2

125-58-5-12/13

Semi-Automatic Device for Welding Thin-Sheet Under Assembly Conditions

ASSOCIATION: Institut elektrosvarki imeni Ye.O. Patona AN UkrSSR (Welding Institute imeni Ye.O. Paton of the AS UkrSSR) and Kiyevskiy mechanicheskiy zavod (Kiyev Mechanical Plant)

SUBMITTED: February 22, 1958

AVAILABLE: Library of Congress

Card 2/2

GOLOGOVSKIY, G.M.

Book on welding in an atmosphere of carbon dioxide. ("Welding in an atmosphere of carbon dioxide" by I.I.Zaruba and others. Reviewed by G.M.Gologovskii). Avtom. svar. 14 no.3:98-99 Mr '61. (MIRA 14:2)

(Welding) (Protective atmospheres)
(Zaruba, I.I.)

GOLOMEJAC, F.

Electroerosive treatment of metals (to be contd.) p. 49

STROJNIŠKE VESTNIK (Fakuleta za eletroaniko in strojništvo Univerze v Ljubjani Institut za turbostroje v Ljubljana Drusov strojnih inženirjev in tehnikov LR Slovenije in Storjna industrija Slovenije) Ljubljana, Yugoslavia. Vol 4, no. 3/4, June 1950

Monthly List of East European Accessions EEAI LC, Vol. 1, no. 6, June 1952 Uncla.

GOIOGRANC, F.

Electroerosive treatment of metals. (Conclusion) p. 116

STROJNIŠKI VESTNIK (Fakulteta za elektrotehniko in strojništvo Univerze v Ljubljani Institut za turbostroje v Ljubljana Drustov strojnih inženirjev in tehnikov LR Slovenije in Storjna industrija Slovenije) Ljubljana, Yugoslavia. Vol 4, no. 5, Sept. 1958

Monthly List of East European Accessions EEAI LC, Vol 8, no. 6, June 1959, Uncla.

GOLOGRANC, F.

Sticking of material to tools during machining. p. 9.

Regulations concerning the mark of quality. p. 13.
Yugoslav standards. p. 15.

Periodical: STROJNISKI VESTNIK.

Vol. 5, no. 1, Jan. 1959.

TECHNOLOGY

SO: Monthly List Of East European Accessions (EEAI) LC

Vol. 8, no. 4
April 1959, Uncl.

APPROVED FOR RELEASE: 09/24/2001 CIA-RDP86-00513R000515730006-4"

GOLOGRANC, Franc, ing.

Rationalization in machining of rolls for rolling mills. Stroj vest 6 no.6:183-186 D '60. (EEAI 10:6)

1. Fakulteta za strojnistvo univerze v Ljubljani.
(Rolling (Metalwork))

GOLOGRANC, Franc

Sixth European Exhibition of Machine Tools. Stroj vest 6 no.1:11-13 Ja '60. (EEAI 10:5)
(Machine tools) (Paris--Exhibitions)

GOLCGRANC, Franc, ing.

Some characteristics of the development of modern machine tools. Stroj vest 6 no.4/5:136-148 S '60. (EEAI 10:5)

1. Oddelek za strojnistvo Univerze v Ljubljani.
(Machine tools)

GOLOGRANC, F.

"Hydraulic presses" by G.Oehler. Reviewed by F.Gologranc.
Stroj vest 8 no.1/2:29-30 Ap '62.

GOLOGRANC, F.

"Mechanical presses" by H.Makelt. Reviewed by F.Gologranc. Stroj vest 8 no.1/2:30 Ap '62.

GOLOGRANC, F.

"Vibrations in machine tools" by S.A.Tobias. Reviewed by F.Gologranc. Stroj vest 8 no.1/2:30 Ap '62.

GOLOGRANC, F.

"Historical development of drop forging" by E.von Wedel. Reviewed by F.Gologranc. Stroj vest 3 no.1/2:31 Ap '62.

GOLOGRANC, F.

"Machine-tool driving gears" by H.Schöpke. Reviewed by F.Gologranc.
Stroj vest no.1/2:31 Ap '62.

GOLOGRANC, F.

"The sledge hammer" by G.Gube. Reviewed by F.Gologranc. Strojvest 8 no.1/2:32 Ap '62.

GOLOGRANC, F.

"Rolling and forging machines" by A.Geleji. 2d ed, Reviewed by F.Gologranc. Stroj vest 8 no.1/2:33 Ap '62.

GOLOGRANC, F.

"Circular cutting" by H. Hilbert. 2d ed. Reviewed by F. Gologranc. Stroj vest 8 no.3:77 Je '62.

GOLOGRANC, F.

"Plastic molding of metals in theory and practice" by A. Geleji. Reviewed by F. Gologranc. Stroj vest 8 no.3:79 Je '62.

GOLOGRANC, F.

Cold bending of pipes" by W.D. Franz. Reviewed by F. Gologranc.
Stroj vest 8 no.4/5:117-118 O '62.

GOLOGRANC, F.

"Guide to thin board shapers." Reviewed by F. Gologranc. Stroj vest 7 no.4/5:131 O '63.

"Fundamentals of the deep drawing in theory and practice, with a specific emphasis on the deep-drawing tests" by W. Panknin. Reviewed by F. Gologranc. Ibid.:131

L 23412-66 EWT(d)/EWT(m)/EWP(v)/T/EWP(t)/EWP(k)/EWP(h)/EWP(1) JD/HW

ACC NR: AP6004140 SOURCE CODE: UR/0125/66/000/001/0066/0068

AUTHOR: Vashchevskiy, V. F.; Gologovskiy, G. M.; Dykhno, S. I.

ORG: none

TITLE: Device for automatic monitoring of the parameters of resistance-welding regime

SOURCE: Avtomaticheskaya svarka, no. 1, 1966, 66-68

TOPIC TAGS: resistance welding, welding equipment component, power monitor, pulse signal, metallurgic testing machine, circuit design, automatic control equipment

ABSTRACT: The authors present a description of the P-192 device for automatic monitoring and signaling of deviations from the set welding regime according to the amplitude of welding current and the parameter

$$A = \int_0^{t_d} i_w dt$$ (where t_d is the duration of the welding-current pulse).

Range of current intensities measured: 1-100 kilo-amperes (ka). Welding-current measurement error: ±5%. The device (Fig. 1) is connected to the welding machine by two circuits. The first circuit (Fig. 2), represented by toroidal measuring transform-

Card 1/5 UDC: 621.791.76:681.1/.2

L 23412-66

ACC NR: AP6004140

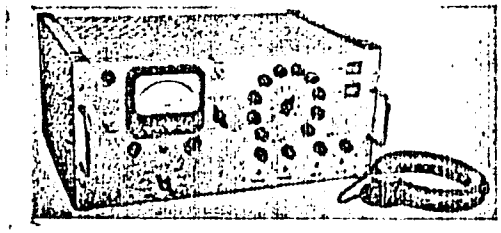

Fig. 1. External view of the P-192 device

Card 2/5

L 23412-66
ACC NR: AP6004140

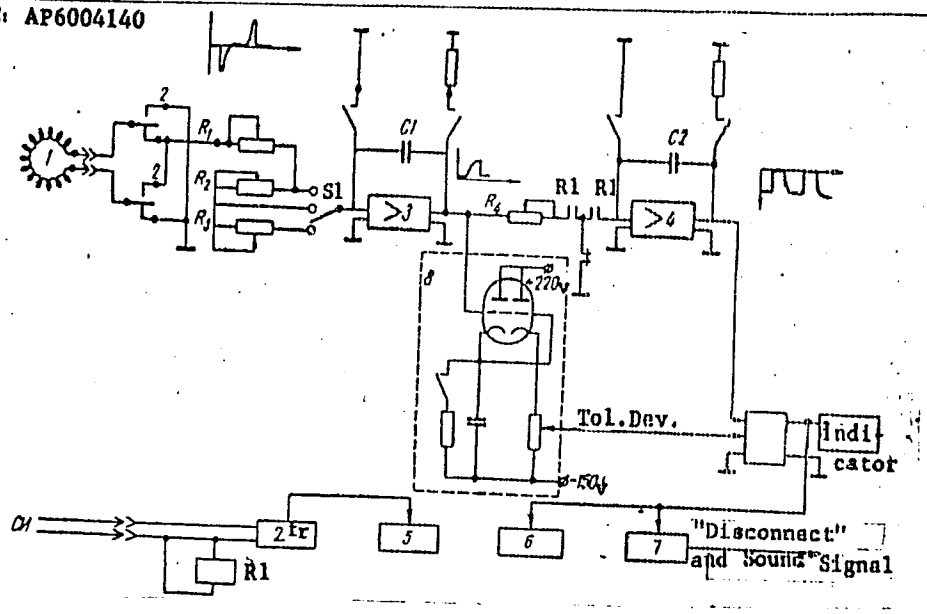

Fig. 2. Block diagram of the device

Card 3/5

L 23412-66

ACC NR: AP6004140

er 1, is connected to the bottom holder of the welding machine. The second circuit pertains to synchronizing voltage pulses which must overlap in time the welding-current pulses and which are used to trigger flip-flop relay 2: the contacts of this relay switch the output of the toroidal transformer, since each time the polarity of current pulses in the welding machine is reversed. The voltage from the toroidal transformer flows to electronic integrator 3 of the DC tube-amplifier type. The input resistors R_1, R_2, R_3 of the amplifier are designed to regulate the time constant of the RC of the integrator. Switch S1 is used to adjust the measurement range to 10, 50 or 100 ka. The integrator output is connected to memory element 8 which records the amplitude value of the restored voltage pulse at the output of integrator 3, whence the pulse is conveyed to a second integrator (DC amplifier 4 and integrating elements -- resistor R_4 and capacitor C2). The contacts of relay R1 cause the resistor R_4 to be connected to the amplifier input and, during the passage of the welding-current pulse, the voltage

$$U_2 \approx \int_0^{t_d} U_1 dt = \int_0^{t_d} \left(\int \frac{di_w}{dt} dt \right) dt = \int_0^{t_d} i_w dt.$$

forms at the output of integrator 4. The voltage proportional to the amplitude of the welding-current pulse, from the output of the memory element, and the voltage pro-

Card 4/5

L 23412-66

ACC NR: AP6004140

portional to the amount of electricity passed during a welding pulse, from the output of the second integrator (amplifier 4), proceed to the device for measuring the tolerances of the parameters, where the variations in the pulse amplitude and the amount of electricity therein, when they exceed the upper and lower limits of the tolerance range, are recorded correct to ~0.5% and indicated by the pointer on the dial. The device also includes built-in electromechanical counters of points at which the current or electricity exceed the specified tolerances and relay counters for generating the "disconnect" signal (opening of contacts) or sound signal (closing of contacts). It is also equipped with sockets for connecting an oscillograph by means of which the current-pulse shape can be visually monitored. The device can be used to monitor the performance of DC, AC and capacitor welding machines. It can be adjusted to three different scales of measurement of current-pulse amplitude and of the corresponding heating (amount of electricity in a pulse): 10 ka, 5 ka-sec; 50 ka, 25 ka-sec; and 100 ka, 50 ka-sec. Currently, a new version of the device, with digital readout which should greatly simplify the measurements, is being developed. Orig. art. has: 3 figures.

SUB CODE: 09, 11, 13/ SUBM DATE: 03Jun65/ ORIG REF: 005/ OTH REF: 000

Card 5/5

USSR/Microbiology. Microbes Pathogenic for Man and Animals F

Abs Jour : Ref Zhur-Biol., No 13, 1958, 57779

Author : Fedenko A. I., Belogyuk L. F., Seykina M. M.
Inst : Kharkov Scientific-Research Institute of Vaccines and Sera
Title : On the Problem of the Pathogenesis of Diphtheria Carriage. Report 1. Duration of Carrying and Biological Properties of Diphtheria Bacteria.

Orig Pub : Tr. Kharkovsk. n.-i in-ta vakcin i sivorotok, 1957, 24, 71-74

Abstract : No abstract.

Card 1/1

DOBATKIN, V.I.; KOZLOVSKAYA, V.P., GOLUBEVATOVA, T.N.

Slaty structure of the fracture of extruded 1163 aluminum alloy products. Metalloved. i term. obr. met. no.12:7-12 D'63. (MIRA 17:2)

SHILOVA, Ye.I.; [illegible]; [illegible]; [illegible]; [illegible]; Prinimali uchastiye: AKHMETZYANOV, M.F.; ZHERNAVLEVA, V.L.; [illegible] TOKMAKOVA, T.N.

Heat-resistant Dl9 alloy. Alium. splavy no.3 [illegible]

DVORKIND, M.M., inzh. V rabote prinimali uchastiye: VAS'YAS, I.P.; KOKSHAROV, V.D.; DRESVYANKIN, V.I.; PARAMONOVA, A.P.; GOLOKHMATOV, S.N.; SHISHARIN, B.N.; GOLIKOVA, T.A.; KLISHA, Ya.A.; KOZHEVNIKOVA, Ye.L.; VYDRINA, Zh.A.; BUSHUYEVA, T.N.; NAZARENKO, G.A.

Behavior of open-hearth furnace crowns under the effect of feeding oxygen into the burner flame and into the bath. Stal' 20 no.2:117-121 F '60. (MIRA 13:5)

1. Vostochnyy nauchno-issledovatel'skiy institut ogneuporov.
(Open-hearth furnaces)
(Firebrick)

ZAKHAROV, A.F.; PETROV, G.A.; NOVIKOV, M.D.; POPOV, L.P.; TORSHILOV, Yu.V.; GOLOKHMATOV, S.N.; GUSAROV, A.N.; KOVAL'CHUK, N.P.

Potentialities for increasing labor productivity in the open-hearth process. Stal' 21 no.6:560-562 Je '61. (MIRA 14:5)

1. Nizhne-Tagil'skiy metallurgicheskiy kombinat.
(Open-hearth furnaces--Equipment and supplies)

Pressure Treatment of Alloys; Collection of Articles, Moscow, Oborongiz, 1958, 141pp.

SOV/[illegible]-58-10-21-82

Translation from: Referativnyy zhurnal, Metallurgiya, 1958, No 10, p 17[illegible] (USSR)

AUTHORS: Livanov, V.A., Shilova, Ye.I., Golokhmatova, T.N., Nikitayeva, O.G.

TITLE: Methods of Hardening Aluminum Alloys Intended for Operation at Elevated Temperatures (Puti uprochneniya alyuminiyevykh splavov dlya raboty pri povyshennykh temperaturakh)

PERIODICAL: V sb.: Legkiye splavy, Nr 1, Moscow, 1958, pp 88-122

ABSTRACT: Investigations were performed in order to determine the effect of various degrees of cold hardening, as well as of conditions of artificial aging (AA), on the mechanical properties of sheets of D16 alloy (A) at room temperature and at elevated temperatures. The initial material consisted of hot-rolled sheets of the D16 A which had been tempered only, or were tempered and subjected to natural aging for a period of five days; the sheets of the A were work-hardened by means of rolling with reductions equivalent to 5, 10, 15, 20, 25, and 30%. AA of work-hardened sheets, as well as sheets which have not been so treated, was accomplished at temperatures of 150, 170, 190, and 200°C, the soaking time being 6, 8, 10, and 12

Card 1/2

SOV/137-58-10-21658

Methods of Hardening Aluminum Alloys (cont.)

hours, respectively. Optimal AA conditions, established on the basis of studies of properties of the A's at room temperature, were maintained during tests at elevated temperatures. The laws governing the changes occurring in the properties of the A relative to the temperature of AA are identical both at room temperature and at elevated temperatures. Specimens which have been aged at 170-180° possess maximal values of σ_s and σ_b but exhibit very low values of δ. At lower temperatures of AA (130-150°), the strength characteristics of the A's are somewhat impaired, but the δ values are increased. Conducting the AA at a temperature of 190-200° results in a lowering of all mechanical properties of the A. It has been established that the strength of tempered and naturally aged D16 A is favorably affected by work hardening at temperatures of 100-200°. Work hardening (5-20% reduction) increases the σ_b of sheets of the D16 A by as much as 10-15% at a temperature of 100° and by 13-18% at a temperature of 150°. Optimal conditions for processing of sheets of D16 consist of tempering operations and work hardening by means of rolling with reductions of 5-20% followed by AA (130-150° for 10-20 hours). Problems on the nature of hardening of an A by means of mechanical working of it after the operations of tempering and prior to the process of AA are discussed. [illegible]

Card 2/2 [illegible]

E. K.

L 37166-66 EWT(m)/T/EWP(t)/ETI/EWP(k) IJP(c) JD/HW/GD/JH
ACC NR: AT6016422 (A) SOURCE CODE: UR/0000/65/000/000/0151/0157

AUTHORS: Livanov, V. A.; Golokhmatova, T. N.; Berezko, R. M.; Vasil'yeva, Yo. N.

ORG: none

TITLE: Structural inhomogeneity of the cladding layer in sheets of alloy D16

SOURCE: AN SSSR. Institut metallurgii. Metallovedeniye legkikh splavov (Metallography of light alloys). Moscow, Izd-vo Nauka, 1965, 151-157

TOPIC TAGS: titanium containing alloy, manganese containing alloy, aluminum alloy / D16 aluminum alloy

ABSTRACT: The effect of hot and cold rolling of alloy D16 sheets on the homogeneity and structure of the aluminum surface layer of the sheets was investigated. The investigation was initiated to determine the mechanism for the formation of large crystal grains in the surface layer of D16AT and D16ATV hot rolled sheets. The effect of adding titanium, manganese, zirconium, and boron on the crystal grain size in the surface layer of the hot rolled sheets was also studied. The experimental results are presented graphically (see Fig. 1). Whereas additions of Zn and B had no effect on the crystal grain size, additions of Ti considerably lowered the crystal grain size, and additions of Mn completely removed any inhomogeneity in the aluminum surface layer of the alloy.

Card 1/2

L 37166-66

ACC NR: AT6016422

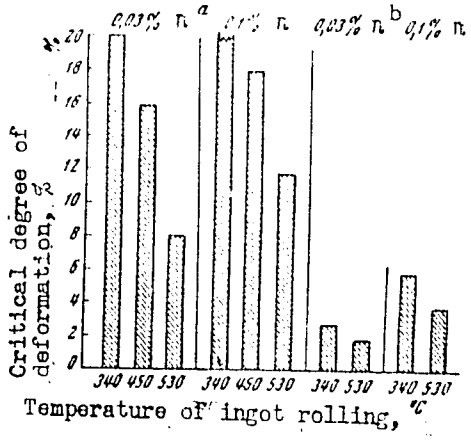

Fig. 1. Critical degree of deformation of aluminum for deformation at room temperature as a function of the titanium content and temperature of hot rolling of aluminum cladding ingots. a - cold rolled aluminum (thickness 2.0 mm); b - surface layer of hot rolled alloy D16.

Orig. art. has: 4 figures.

SUB CODE: 11/ SUBM DATE: 16Sep65/ ORIG REF: 001

Card 2/2 af

p. 62

GOLOKHVASTOVA, M.V.

Thirtieth anniversary of the Great October Revolution and lessons in geography. Geog. v shkole no.3:40-42 My-Je '47. (MIRA 9:6)
(Geography--Study and teaching)

GOLOKOVSKAYA, I. V.

"The Agrotechnical Bases for Cultivating Grain Crops in the Steppe Zone of the Ukrainian SSR." Candidate Sci, Odessa Agricultural Inst, [illegible] Odessa, 1[illegible]. (KL, No 1, Apr [illegible])

SO: Sum. No. 70[illegible], 2 Nov [illegible] - Survey of Scientific and Technical Dissertations Defended at USSR Higher Educational Institutions (10).

COUNTRY : USSR

CATEGORY : Plant Morphology. Anatomy

ABS. JOUR. : Referat. Zh., Biol., No. 19, 1958, No. [illegible]

AUTHOR : [illegible]

INST. : [illegible] Timiryazev Agricultural Academy

TITLE : On the Possibility of Securing Two Crops of Corn.

ORIG. PUB. : [illegible]

ABSTRACT : In the experiments of [illegible] Timiryazev Agricultural Academy [illegible] the growth of the plant [illegible] Formation of flowers was [illegible] the [illegible] The [illegible] was [illegible] the [illegible] The [illegible] of the green [illegible] the [illegible] July [illegible] the result of the [illegible] the [illegible] plants [illegible] the [illegible] the [illegible] the [illegible]

Card: [illegible]

COUNTRY :
CATEGORY :

AMS. JOUR. : [illegible]

AUTHOR :
INST. :
TITLE :

SOURC. PE. :

ABSTRACT : [illegible] The earlier the [illegible] the larger were the [illegible] by the growing plants. [illegible] in the development and the lag in growth are explained by the removal of a considerable part of the assimilation surface. Plants with the stem cut, i.e. those in which the primordial panicle and part of the stem with axillary buds were removed, grew for

CARD: [illegible]

GOLOKOZ, V.F.; GORSHKOVA, N.G.

Hydraulic mechanism for breaking rocks. Gor.zhur. no.1:77 Ja '63. (MIRA 16:1)

(Boring machinery)

GOLOKVOSCHUS, P.B.

Necessary and sufficient conditions of the periodicity of a fundamental system of solutions for some linear systems of differential equations. Dokl. AN BSSR 3 no.7:287-291 Jl '59. (MIRA 12:1)

1. Predstavleno akademikom AN BSSR N.P. Yerugin.
(Differential equations, Linear)

GOLOKVOSCHUS, P.B.

Seeking characteristic indices of a system of two linear homogeneous differential equations with periodic coefficients containing a small parameter. Dokl.AN BSSR 3 no.9:361-367 S '59. (MIRA 13:2)

1. Predstavleno akademikom AN BSSR N.P.Yeruginym.
(Differential equations, Linear)

85926

S/140/60/000/003/005/011
C111/C222

16.3400

AUTHOR: Gelekvoschus, P.B.

TITLE: Remark on Bounded and Periodic Solutions of a System of Two Linear Differential Equations With Periodic Coefficients Which is Integrated in a Closed Form

PERIODICAL: Izvestiya vysshikh uchebnykh zavedeniy. Matematika, 1960, Nr.3, pp.113-117

TEXT: Theorem 1: In the system

(1.1) $$\frac{dX}{dt} = X\left[U_1 \varphi_1(t) + U_2 \varphi_2(t)\right]$$

let either

(1.6) $$U_1 = \begin{Vmatrix} a & 0 \\ c & a \end{Vmatrix}, \quad U_2 = \begin{Vmatrix} b_1 & 0 \\ 0 & b_2 \end{Vmatrix}$$

or

(1.7) $$U_1 = \begin{Vmatrix} a+2cm & -cm^2 \\ c & a \end{Vmatrix}, \quad U_2 = \begin{Vmatrix} b & m^2 n \\ n & b \end{Vmatrix}.$$

Let the continuous periodic functions $\varphi_k(t)$ $(k=1,2)$ with the period ω satisfy

Card 1/4

85926

S/140/60/000/003/005/011
C111/C222

Remark on Bounded and Periodic Solutions of a System of Two Linear Differential Equations With Periodic Coefficients Which is Integrated in a Closed Form

(1.3) $$\int_0^1 \varphi_\alpha(t)dt = 0$$

Under these assumptions all solutions of (1.1) have the period $\omega = 1$ then and only then if the parameter α given by

(2.1) $$\alpha = \begin{cases} b_2 b_1 & \text{in the case (1.6)} \\ 2mn & \text{in the case (1.7)} \end{cases}$$

is a zero of the function

(2.2) $$I(\alpha) = \sum_{k=0}^{\infty} \frac{a_k}{k!}\alpha^k \quad (\alpha \neq 0),$$

where

(2.3) $$a_k = \int_0^1 L_2^k(t)\varphi_1(t)dt \quad (k=0,1,2,\ldots)$$

Card 2/4

85926

S/140/60/000/003/005/011
C111/C222

Remark on Bounded and Periodic Solutions of a System of Two Linear Differential Equations With Periodic Coefficients Which is Integrated in a Closed Form

and $L_2(t)$ is given by

$$(2.3) \qquad L_k(t) = \int_0^t \varphi_k(\tau)\,d\tau \quad (k=1,2).$$

As an example the author considers the system

$$(3.1) \qquad \frac{dX}{dt} = X\left[U_1 \cos 2\pi t + U_2 \sin 2\pi t\right],$$

where U_k are given by (1.6) or (1.7). All solutions are periodic with $\omega=1$ if $\frac{\alpha_1}{2\pi}$, where α_1 is given by (2.11), is a zero of the Bessel function

Card 3/4

85926

S/140/60/000/003/005/011
C111/C222

Remark on Bounded and Periodic Solutions of a System of Two Linear Differential Equations With Periodic Coefficients Which is Integrated in a Closed Form

(3.4) $$J_{\nu}\left(\frac{a_1}{2\omega}\right) = \sum_{\mu=0}^{\infty} (-1)^{\mu} \frac{1}{\mu!(\mu+2)!} \left(\frac{a_1}{4\omega}\right)^{2\mu+1}$$

There are 7 Soviet references

ASSOCIATION: Vil'nyusskiy gosudarstvennyy universitet imeni V. Kapsukasa (Vil'nyus State University imeni V. Kapsukas)

SUBMITTED: October 1, 1958

Card 4/4

GOLOKVOSCHUS, P.B.

Seeking characteristic exponents of a system of two differential equations with periodic coefficients, analytical relative to a small parameter. Dokl.AN BSSR 4 no.6:236-240 Je '60. (MIRA 13:7)

1. Vil'nyusskiy gosudarstvennyy universitet im. V.Zapsukasa. Predstavleno akad. AN BSSR N.P.Yeruginym.
(Differential equations)

GOLOKVOSCHUK, P. P. Cand Phys-Math Sci -- "Problems of the limitedness of solutions of linear systems of differential equations with periodic coefficients in certain individual cases." Minsk, 1960 (Acad Sci Belorussian SSR. Department of Phys-Math, Chemical Sci Sci) (KL, 1-61, 179)

-15-

L 18525-63 EWT(d)/FCC(w)/BDS AFFTC/IJP(C)

ACCESSION NR: AT3002172 S/2924/61/001/01-/0059/0077

53
52

AUTHOR: Golokvoschyus, P.

TITLE: Finding characteristic exponents of a system of two homogeneous differential equations

SOURCE: Litovskiy matematicheskiy sbornik. v. 1, no. 1-2, 1961, 59-77

TOPIC TAGS: characteristic exponent, differential equation

ABSTRACT: The author investigates characteristic exponents for the system given in the equation, where Q_0 is a constant matrix, $Q_k(t)$ $(k = 1,2,\ldots)$ are continuous matrices of the independent variable t with common period $\omega = 1$, X is the integral matrix, μ is a small parameter, and the series converges for $|\mu| < r$. He assumes that Q_0 and $Q_k(t)$ $(k = 1,2,\ldots)$ are second degree matrices and that the characteristic numbers ξ_1 and ξ_2 of Q_0 satisfy the condition given in the following

$$\frac{dX}{dt} = X\left[Q_0 + \sum_{k=1}^{\infty} Q_k(t)\mu_k\right], \quad \xi_1 - \xi_2 \neq 2\pi m i \quad (i = \sqrt{-1}),$$

[Abstracter's note: μ_k should be μ^k.]

where m is an integer. Orig. art. has 158 formulas.

Card 1/2 ASSN: Vilnius State University

S/169/61/000/012/061/[illegible]
D228/D302

AUTHOR: Gololeva, Ye. I.

TITLE: Role of radiation in the formation of stratus cloud and in its evolution

PERIODICAL: Referativnyy zhurnal, Geofizika, no. 12, 196[illegible], 30, abstract 12B197 (Meteorol. i gidrologiya, 1961, no. 7, 22-26)

TEXT: The question of the influence of the radiational [illegible] ing of the lower half-kilometer layer of air on the formation and evolution of low stratus cloud is discussed. The case of the formation of low cloud near Moscow in the period from March 9 to March 11, 1956, is discussed as an example. The appearance of stratus cloud was accompanied by the fall of the temperature in the lower 500-m layer during the considerable weakening of the wind with altitude. It is established that the main cause of this was radiational cooling. In addition, the role of the

Card 1/2

GOLOLOB, V.

Practices of freight transportation agencies. Avt.transp. 39 no.4:13 Ap '61. (MIRA 14:5)
(Estonia—Freight and freightage)

CA

13

A nickel-enriched biogeochemical province in Southern Ural. A. D. Golobov. *Byull. Moksk. Obshchestva Ispytatel Prirody, Otdel Biol* 57, No. 3, 3-16 (1952). A study of a region of Northern Kazakhstan-Southern Ural in which relatively high levels of Ni are found in the soil is reported. Up to 0.25% levels in farm soils are not uncommon. Hence, all ground waters, plants, and animals possess supernormal amounts of the element in their makeup. The study of cattle and sheep showed that highest levels are found in the skin, muscle, and liver. The wool retains slightly lesser levels than does the skin proper. Ni was found, however, in all organs. Usually the organs that contain high levels of Ni also carry high levels of Cu. The high levels of Ni are apt to cause so-called nickel eczema and an endemic affliction of visual organs of the farm animals. The production (or formation) of wool by sheep in this region is supernormal and appears to be a form of adaptation and detoxication. G. M. Kosolapoff

KOVAL'SKIY, V.V.; GOLOLOBOV, A.D.

[Methods for determining trace elements in soils, plant and animal organisms] Metody opredeleniia mikroelementov v pochvakh, rastitel'nykh i zhivotnykh organizmakh. Moskva, Redaktsionno-izdatel'skii otdel VIZH, 1959. 137 p. (MIRA 13:3)

1. Moscow. Vsesoyuznyy nauchno-issledovatel'skiy institut zhivotnovodstva.

(Trace elements)

GOLOLOBOV, A.D.

Biogeochemical provinces rich in nickel and copper. Trudy Biogeokhim. lab. no.11:178-188 '60. (MIRA 14:5)

1. Vsesoyuznyy nauchno-issledovatel'skiy institut zhivotnodstva.
(COPPER--PHYSIOLOGICAL EFFECT)
(NICKEL--PHYSIOLOGICAL EFFECT) (VETERINARY PHYSIOLOGY)

GOLOLOBOV, A.D.

Photometric determination of protein in milk. Vop.pit. 21 no.3:17-22 My-Je '62. (MIRA 15:10)

1. Iz TSentral'noy khimiko-analiticheskoy laboratorii (zav. - kand.biologicheskikh nauk A.D.Gololobov) Vsesoyuznogo nauchno-issledovatel'skogo instituta zhivotnovodstva, Moskva.
(MILK--ANALYSIS AND EXAMINATION) (PROTEINS)

GOLOLOBOV, A.D., kand. biol. nauk, [illegible], red.;
[illegible], red.

[Methodological recommendations on the determination of trace elements in soils, plant and animal organisms] Metodicheskie rekomendatsii po opredeleniiu mikroelementov v pochvakh, rastitel'nykh i zhivotnykh organizmakh. [n.p.] Otdel nauchno-tekhn. inf. [illegible], 19[illegible], [illegible] p.
(MIRA 17:8)

1. Moscow. Vsesoyuznyy [illegible] nauchno-issledovatel'skiy institut zhivotnovodstva. [illegible] Vsesoyuznoy akademii sel'skokhozyaystvennykh nauk imeni V.I. Lenina (for Koval'skiy).

GOLOLOBOV, A.D.

Determining manganese by the photometric method using formaldoxine. Pochvovedenie no.3:89-93 Mr '65.

(MIRA 18:6)

1. Vsesoyuznyy nauchno-issledovatel'skiy institut zhivotnovodstva.

STEPH[illegible], [illegible], kand. tekhn. nauk; GOLOLOBOV, A.D., kand. biolog. nauk

[illegible]ein hydrolysates and synthetic amino acids as additional sources of food proteins. Zhur. VKHO IC no.3:314-319 '65. (MIRA 18:8)

GRIGORIEV, L.P., [illegible]

Chromatic determination of [illegible] in [illegible] and plants using pyridylazoresorcinol. [illegible]
81-88 [illegible]

1. [illegible]
volatile, [illegible]

GOLDBERG, A. [illegible]

"Study of Textile Fibers and Characteristics of Horses and Cattle Under Possible Irradiation." Cand Vet Sci, [illegible] Moscow, 1[illegible]. (VI, [illegible], [illegible])

SO: Sum. No. [illegible], 24 Jan 55--Survey of Scientific and Technical Dissertations Defended at the USSR Higher Educational Institutions (1)

USSR/Zooparasitology. Ticks and Insects - Vectors of Causal Organisms. Ticks. G

Abs Jour: Ref. Zhur. - Biol., No 23, 1958, 104096

Author : Gololobov, A. G.

Inst : All-Union Institute of Experimental Veterinary Medicine

Title : Study of ixodial Ticks and Hemosporidioses of Horses and Long-Horned Cattle under the Conditions of Sakhalin.

Orig Pub: Tr. Vses. in-ta eksperim veterinarii, 1957, 21, 290-295

Abstract: Four species of ixodial ticks are found on Sakhalin. Ixodes persulcatus was found in all the places examined, between 46-61° north latitude both on cattle and on wild animals and birds. The season of activity of its imago

Card 1/2

36

GOLOLOBOV, A.P.

Clinical marphological modifications of bones in intramedullary fixation of fractures with various metals; experimental investigations [with summary in English, p.159] Vest.khir. 77 no.6:64-70 Je '50. (MLRA 9:8)

1. Iz voyskovoy chasti (nach. - A.F.Il'in, nauchn. rukovoditel' raboty - D.I.Drozdov)
(FRACTURES, experimental,
intramedullary nailing, eff. of various metals (Rus))

GOLOLOBOV, A.P., podpolkovnik med.sluzhby; SHLAYFER, G.R., podpolkovnik med.sluzhby

Organization of medical practice by military physicians in a garrison hospital. Voen.-med.zhur. no.10:79-80 O '61. (MIRA 15:5)

(MEDICINE, MILITARY)